PC POWER & COOLING®

Turbo Master Industrial Series
1350 Watt ATX (TM1350)

Series Wattages: 750 | 1350

P/N: TM1350

UPC: 855900005514

Dimension: 150 mm x 86 mm x 180 mm (W x H x D) (5.9” x 3.4” x 7.1”)

Total Max Power: 1350 W @ 115 - 240Vac

Product Description:
PC Power & Cooling’s Turbo Master Series 1350 Watt, 80 Plus Gold, Fully-Modular, Active PFC, Quiet Industrial Grade, ATX PC Power Supply, 7 Year Warranty, TM1350

Product Overview:
When you need more, demand the max out of your computer, gaming rig or mining system on the back of PC Power & Cooling’s Turbo Master 1350-watt Power Supply. Our sleek design with fully modular cables gives you the ultimate performance from your computing command center. With over 3 decades as an industry leader in computer power supplies, PC Power & Cooling’s 7-year warranty supports this power plant which gives you excellent noise and ripple, tight voltage regulation, and superior components to ensure a smooth operation of your system for a long life.

Clean, cool and quiet installation:

The fully modular Turbo Master series keeps your case running clean, quiet and clear of cable clutter. Under normal loads, no active cooling is required therefore the fan simply doesn’t spin. But, when you need all the power the Turbo Master can deliver, the thermally controlled fan adjusts its speed to match demand. The dimple designed 135mm fan provides low noise even at full load. The powerful single +12V rail provides continuous power up to 50 degrees C, which is ideal for demanding multi-GPU environments. With an 80 plus gold rating, the Turbo Master operates at 90% efficiency, which will ease your cost of operation.

Features:

- ✓ Ease of installation
- ✓ 80-Plus Gold Certified (90% Efficiency)
- ✓ 7-Year Warranty
- ✓ US Technical Support
- ✓ Temperature Range: Operating 0°C - 50°C
- ✓ 135mm ball bearing fan, varies RPM by load and temperature for whisper quiet operation
- ✓ Active Power Factor Correction (PFC) to effectively regulate input voltage
- ✓ Single +12V rail for efficient power distribution in your system
- ✓ 100% Fully Modular Cable Configuration
- ✓ Intel® 10th-Gen CPU compatible
- ✓ ErP 2013 compliance for lower power usage in standby mode or off mode
- ✓ Protection Circuits - Over Current Protection (OCP), Over Power Protection (OPP), Over Voltage Protection (OVP), Under Voltage Protection (UVP), Short Circuit Protection (SCP), Over Temperature Protection (OTP)
- ✓ Compliant with the latest ATX12V and SSI PSDG standards for worry-free compatibility

PC POWER & COOLING®

Turbo Master Industrial Series
1350 Watt ATX (TM1350)

Series Wattages: 750 | 1350

P/N: TM1350

UPC: 855900005514

Input Specifications:	
Input voltage	115-240Vac Full Range
Input frequency	50-60 Hz
Input Current	15 A (RMS)
Power Factor	Active PFC

Output Specifications:					
Voltage	+3.3V	+5V	+12V	-12V	+5Vsb
Regulation	±2%	±2%	±2%	±10%	±5%
Max Load	25A	25A	112.5 A	0.3A	3.0A
Ripple & Noise	40 mVp-p	40 mVp-p	80 mVp-p	80 mVp-p	40 mVp-p
Protection	OCP, OPP, SCP, OVP, UVP, OTP				

Environmental specifications:	
Temperature	Operating: 0 to 50-degree C, Storage: -40 to 70-degree C
Humidity	Operating: 20%-90%, Storage: 20%-95%
Cooling	135mm, ball bearing, fan varies RPM by load and temperature for whisper quiet operation

General specifications:	
Hold-up time	16ms
Efficiency	at least 90% @ 50% load, 80 Plus Gold
MTBF	100,000 hours
Output Connector	20+4-pin ATX, 4+4-pin & 8-pin CPU, 12 x 6+2-pin PCI-E, 15 SATA, 5 Peripheral
Warranty	7 years
Languages	English, German, Spanish, French, Italian, Russian, Japanese, Chinese

Packaging and Accessories:		
Accessories	Product Manual, 4 x Mounting Thumb Screws, 14AWG Power Cord, 4 x Velcro Cable Ties, Thank You Card, Cable Pouch, Case Badge	
Product Weight (W/Cables)	Retail Package Weight	Master Case Weight (5 per)
3.24 kg (7.15 lb),	3.96 kg (8.75 lb)	20.76 kg (45.8 lb)
Retail Package Dimensions	(360mm x 220mm x 100mm) (14.2” x 8.7” x 3.9”)	

Safety & regulations

Tested To Comply With FCC Standards For Home or Office Use

TUV, cTUVus, CB, FCC-B, CE, RoHS,WEE, ErP

PC POWER & COOLING®

Turbo Master Industrial Series
1350 Watt ATX (TM1350)

Series Wattages: 750 | **1350**

P/N: TM1350

UPC: 855900005514

MECHANICAL DRAWING: TM1350

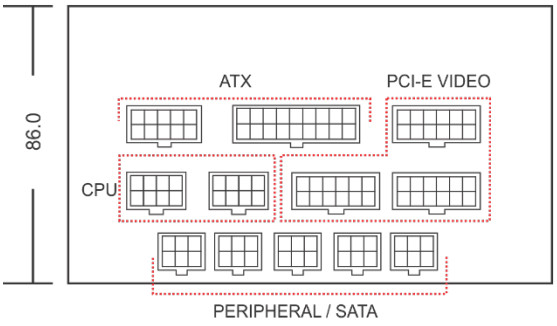

ALL CASE MEASUREMENTS ARE IN mm

5.9" X 3.4" X 7.1" (W X H X D)

ALL WIRE LENGTHS ARE IN INCHES

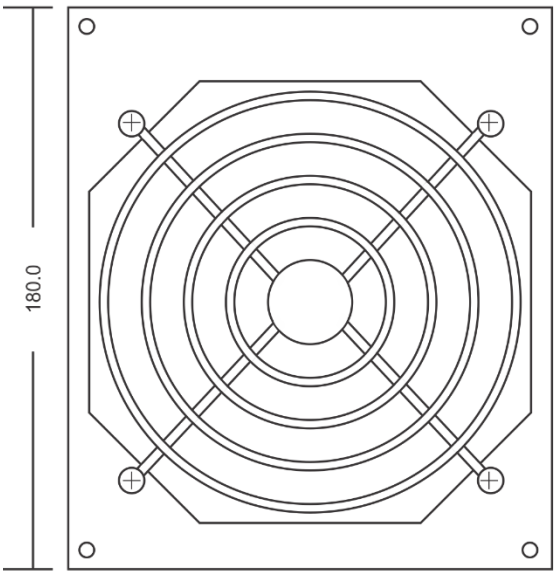

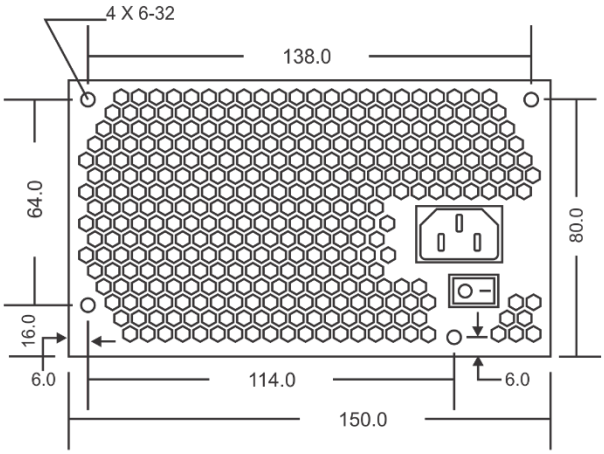

Sleeved Cable

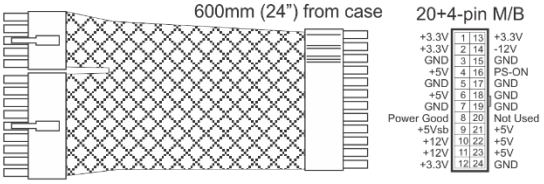

Flat Ribbon Cables

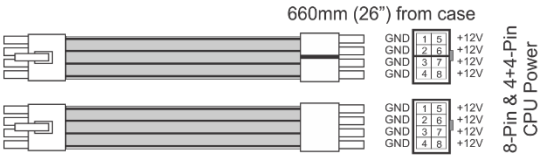

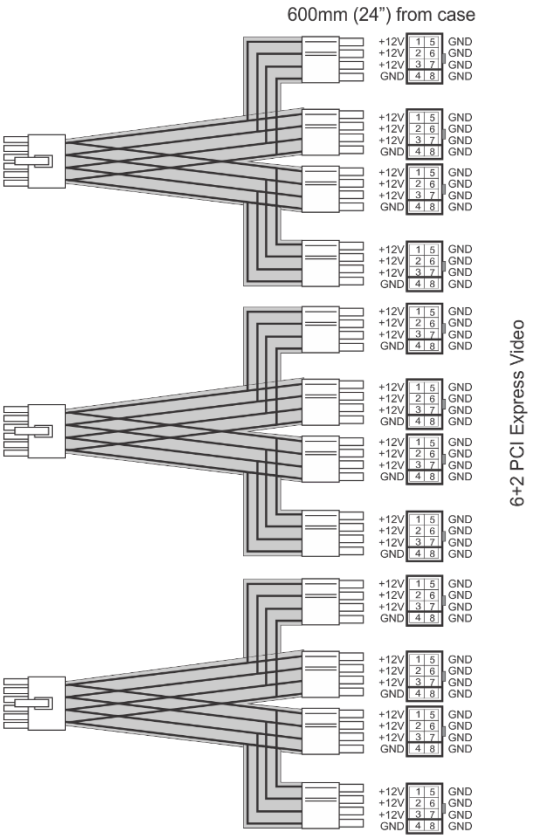

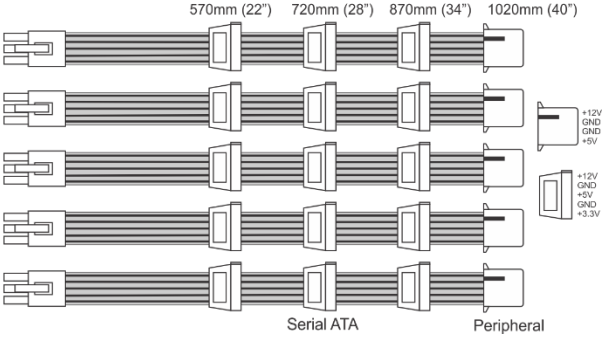

PC POWER & COOLING®

Turbo Master Industrial Series
1350 Watt ATX (TM1350)

Series Wattages: 750 | **1350**

P/N: TM1350

UPC: 855900005514
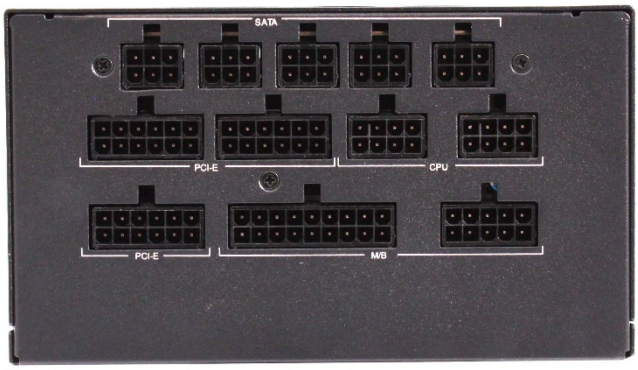
Gallery: